Three Phase Commercial Condenser Fan Open Dripproof, Air Over

APPLICATIONS:

To meet manufacturer's requirements for condenser cooling fans in commercial air conditioning applications where 3 phase power is required.

FEATURES:

- Automatic Reset Thermal Overload Protector
- Reversible Rotation
- Continuous Duty, Air Over
- Double-Sealed Ball Bearings
- Dual Voltage
- Class B Insulation
- 140°F (60°C) Ambient Rated
- Shaft-Up Mounting
- **Discount Symbol: DS-3HAC**

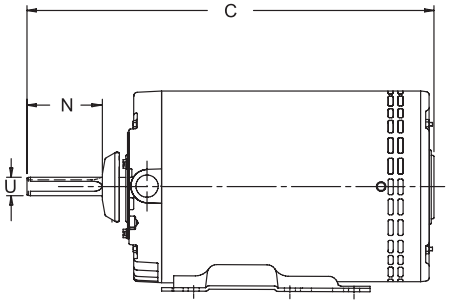

Belly Band Mount, Flat and Keyway on Shaft

HP	RPM	Voltage	Catalog Number	List	Bearings	NEMA®† Frame	Amps	Shaft N	Shaft U	SF	Total C	Ship Wt. (lbs)	Notes	OEM
3/4	1140	208-230/460	1817	$389	Ball	56Z	3.2/1.6	6.0	0.625	1.00	16.8	28		
1	1140	208-230/460	1818	$411	Ball	56Z	4.0/2.0	6.0	0.625	1.00	16.8	29		
	1140	200-230/460	1816	$417	Ball	56Z	6.0/3.0	5.0	0.625	1.00	14.5	19		DB
	1140	200-230/460	1326	$485	Ball	48Y	3.5-3.3/1.7	3.0	0.625	1.00	13.6	35		CA
	1140	200-230/460	8058	$462	Ball	56Z	3.6/1.8	3.4	0.625	1.00	13.7	30		LE
	850	208-230/460	1828	$542	Ball	56Z	5.0/2.5	6.0	0.625	1.00	17.2	33		
	850	575	1829	$696	Ball	56Z	2.1	6.0	0.625	1.00	17.2	33		
1 1/2	1140	208-230/460	1819	$453	Ball	56Z	6.2/3.1	6.0	0.625	1.00	16.8	36		
2	1140	208-230/460	8987	$492	Ball	56Z	7.8/3.9	6.0	0.625	1.00	16.8	43		

Rigid Base Mount, Flat and Keyway on Shaft

HP	RPM	Voltage	Catalog Number	List	Bearings	NEMA®† Frame	Amps	Shaft N	Shaft U	SF	Total C	Ship Wt. (lbs)	Notes	OEM
1	1140	208-230/460	1820	$411	Ball	56YZ	4.0/2.0	6.0	0.625	1.00	16.8	32		
1 1/2	1140	208-230/460	1821	$458	Ball	56YZ	6.2/3.1	6.0	0.625	1.00	16.8	39		
2	1140	208-230/460	1822	$500	Ball	56YZ	7.8/3.9	6.0	0.625	1.00	17.3	45		

CA = Carrier®† DB = Dunham Bush®† LE = Lennox®†

† All marks shown within this document are properties of their respective owners.